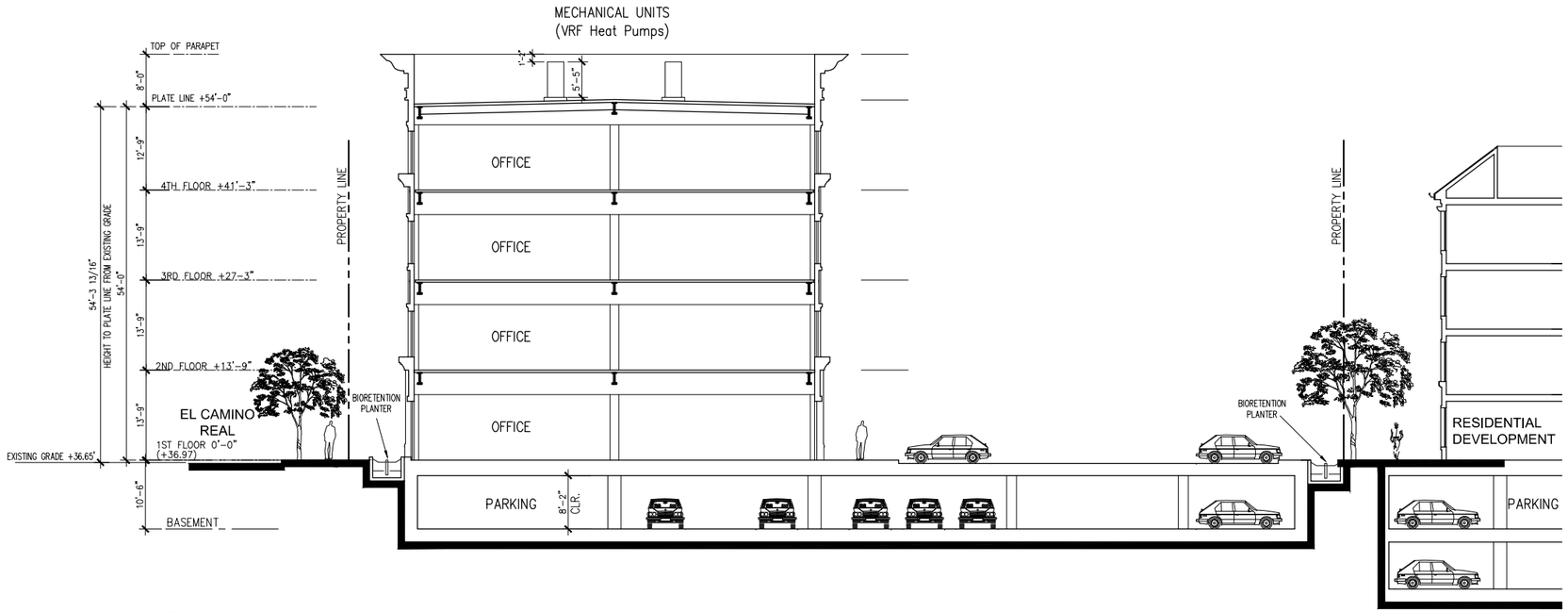


1 OFFICE SECTION 1
1"=10'-0"

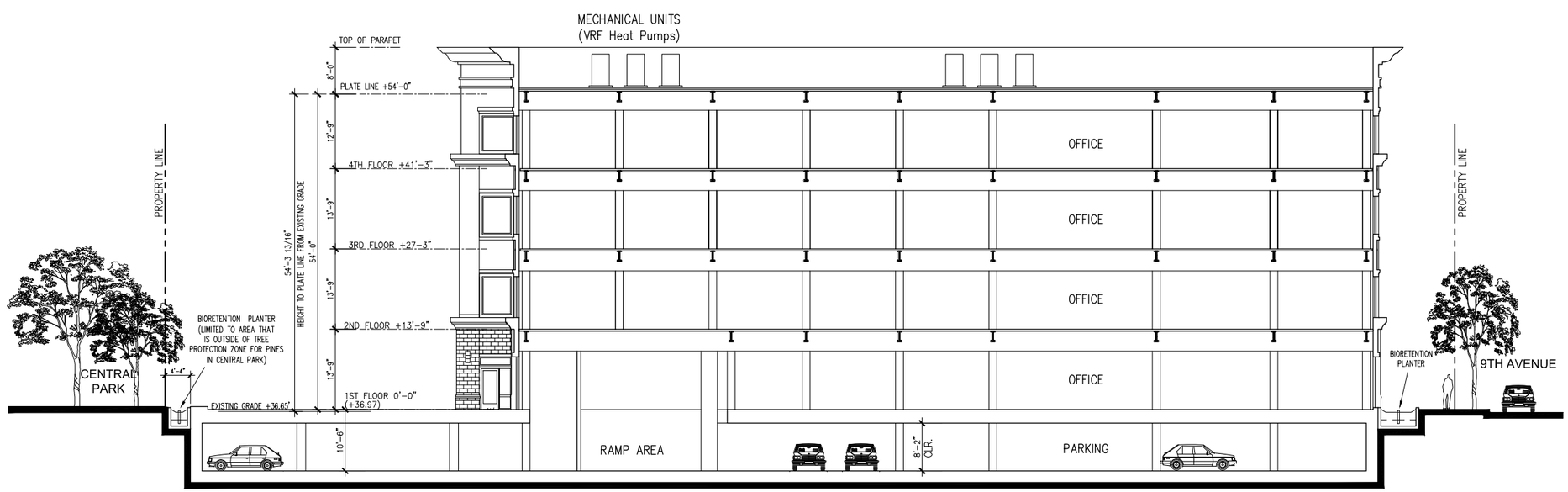


2 OFFICE SECTION 2
1"=10'-0"

0' 10' 20' 40'
SCALE: 1" = 10'-0"


DES ARCHITECTS ENGINEERS
399 Bradford Street
Redwood City, Ca. 94063
Tel: (650) 364-6453
Fax: (650) 364-2618
www.des-ae.com


TRANS WORLD ASSURANCE
885 South El Camino Real
San Mateo, CA 94402

# CENTRAL PARK SOUTH

885 South El Camino Real
San Mateo, CA 94402

| ISSUE: | DATE: | DESCRIPTION: |
|---|---|---|
| | 11/10/2014 | Revised planning application |
| | 01/29/2015 | Revised planning application |
| | 03/16/2015 | Revised planning application |

DRAWN BY:
REVIEWED BY:
APPROVED BY:
DES PROJECT NO.:

## OFFICE BUILDING SECTIONS

© 2014

20A
SHEET NO.

Mar 15, 2015 – 1:20pm djackins P:\TransWorld\9th-ElCamino\19947001\Dwg\Arch\20A-Office Sections.dwg

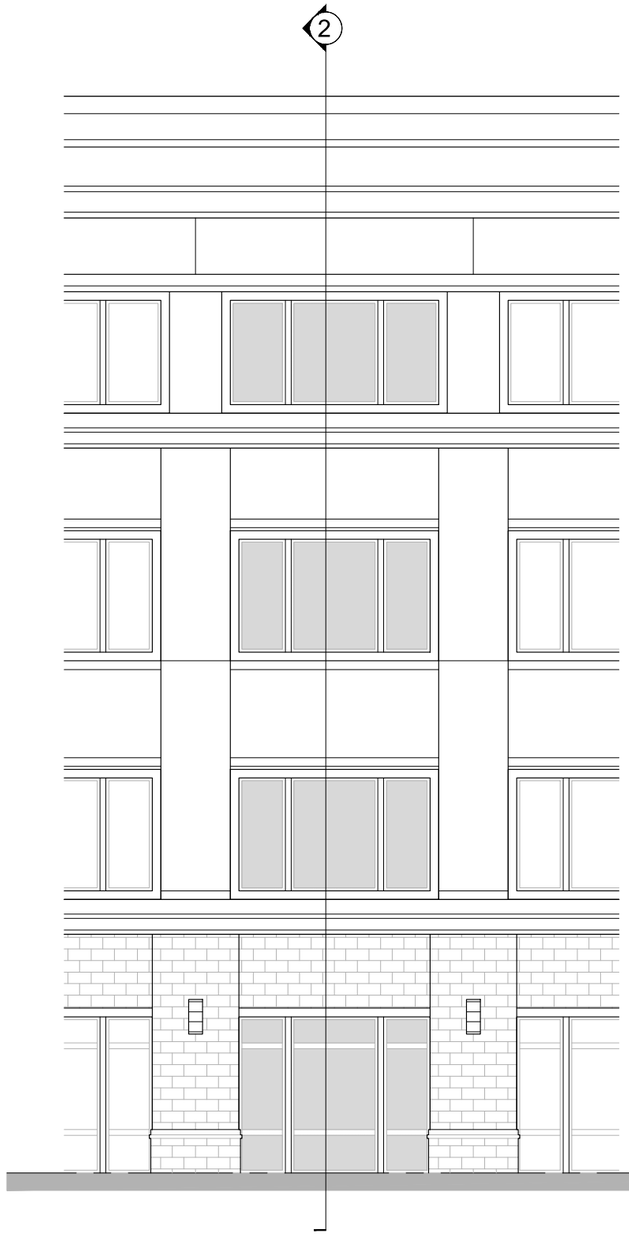


1 TYPICAL PARTIAL ELEVATION
1/4"=1'-0"

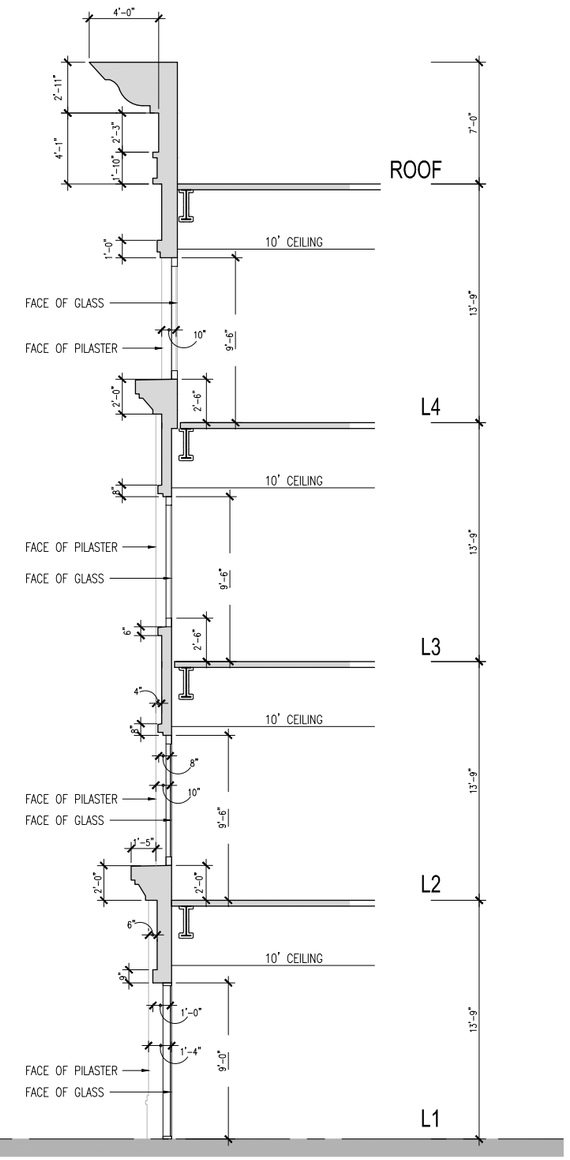


2 TYPICAL WALL SECTION
1/4"=1'-0"

0' 4' 8' 16'

SCALE: 1/4"=1'=0"

DES
ARCHITECTS
ENGINEERS

399 Bradford Street
Redwood City, Ca. 94063
Tel: (650) 364-6453
Fax: (650) 364-2618
www.des-ae.com

twa
TRANS WORLD ASSURANCE
885 South El Camino Real
San Mateo, CA 94402

# CENTRAL PARK SOUTH

885 South El Camino Real
San Mateo, CA 94402

| ISSUE: | DATE: | DESCRIPTION: |
|---|---|---|
| | 11/10/2014 | Revised planning application |
| | 01/29/2015 | Revised planning application |

DRAWN BY:

REVIEWED BY:

APPROVED BY:

DES PROJECT NO.:

OFFICE BUILDING
WALL SECTION

© 2014

20B

SHEET NO.

Mar 15, 2015 - 1:21pm djeakins P:\TransWorld\9th-ElCamino\99470011\Dwg\Arch\20B- Wall Section.dwg

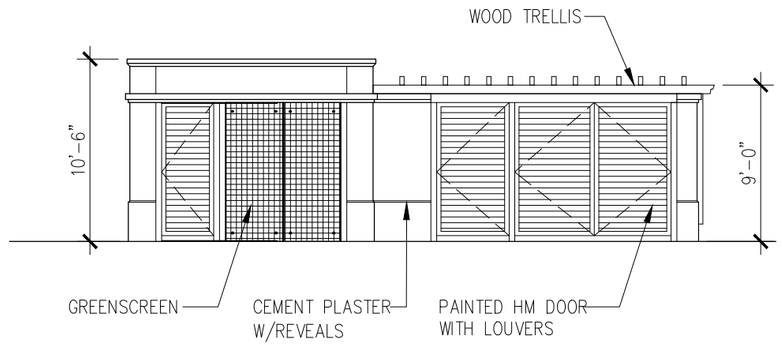


1 FRONT ELEVATION
1/4"=1'-0"

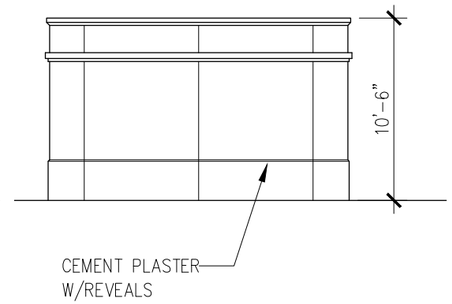


2 SIDE ELEVATION
1/4"=1'-0"

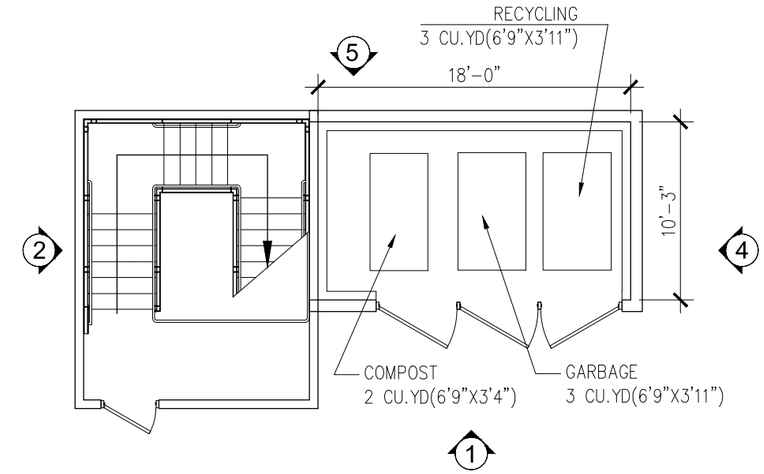


3 STAIR AND TRASH ENCLOSURE PLAN
1/4"=1'-0"

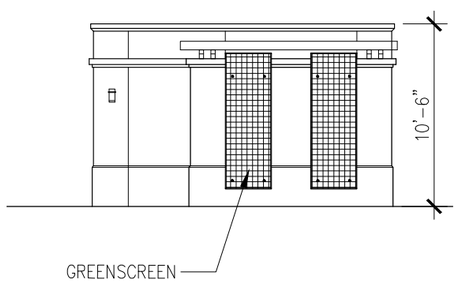


4 SIDE ELEVATION
1/4"=1'-0"

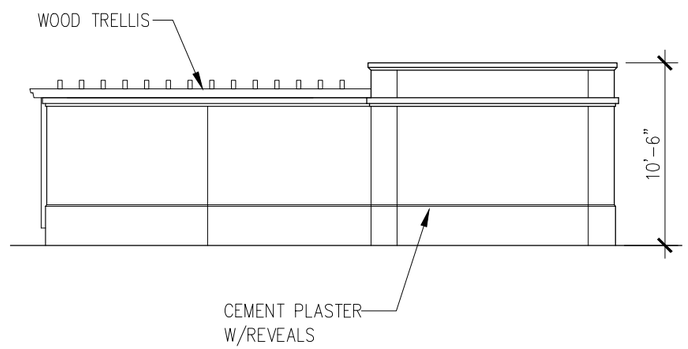


5 REAR ELEVATION
1/4"=1'-0"

6 SKETCH
not to scale

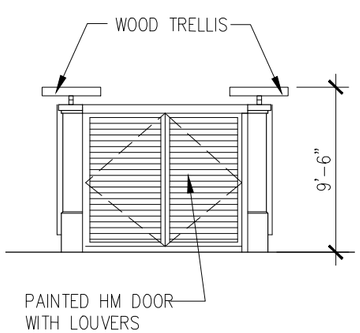


7 FRONT ELEVATION
1/4"=1'-0"

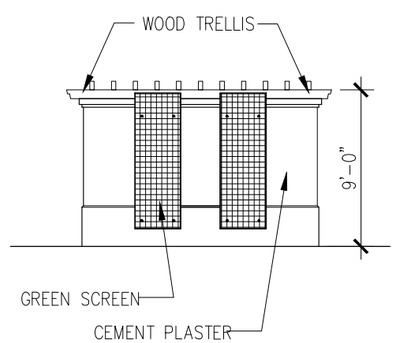


8 SIDE ELEVATION (REAR SIMILAR)
1/4"=1'-0"

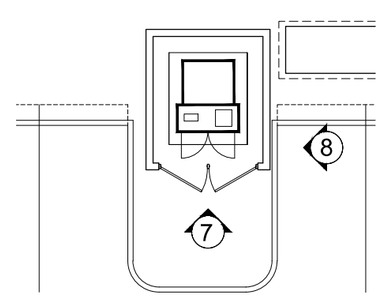


9 TRANSFORMER ENCLOSURE PLAN
1/4"=1'-0"

DES ARCHITECTS ENGINEERS
399 Bradford Street
Redwood City, Ca. 94063
Tel: (650) 364-6453
Fax: (650) 364-2618
www.des-ae.com

TWA TRANS WORLD ASSEMBLAGE
885 South El Camino Real
San Mateo, CA 94402

# CENTRAL PARK SOUTH

885 South El Camino Real
San Mateo, CA 94402

| ISSUE: | DATE: | DESCRIPTION: |
|---|---|---|
| | 11/10/2014 | Revised planning application |
| | 01/29/2015 | Revised planning application |

DRAWN BY:
REVIEWED BY:
APPROVED BY:
DES PROJECT NO.:

TRASH AND STAIR ENCLOSURE, TRANSFORMER ENCLOSURE- PLANS AND ELEVATIONS

© 2014

21
SHEET NO.

Mar 15, 2015 - 1:23pm djackins P:\TransWorld\9th-ElCamino\9947001\Dwg\Arch\21-Trash Screening.dwg

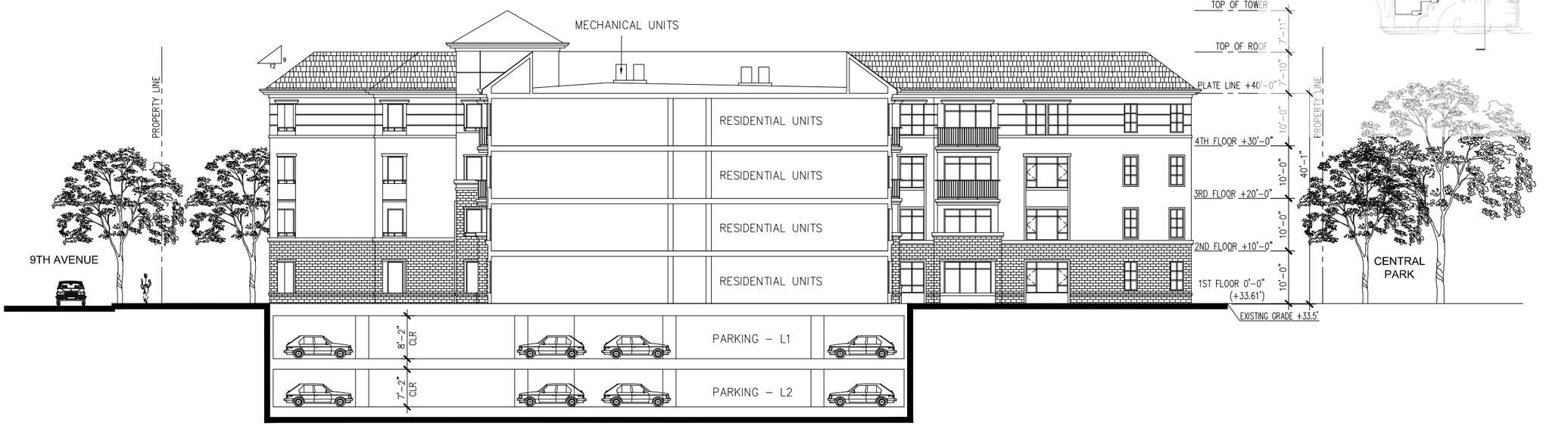


1 NORTH / SOUTH SECTION
1:20

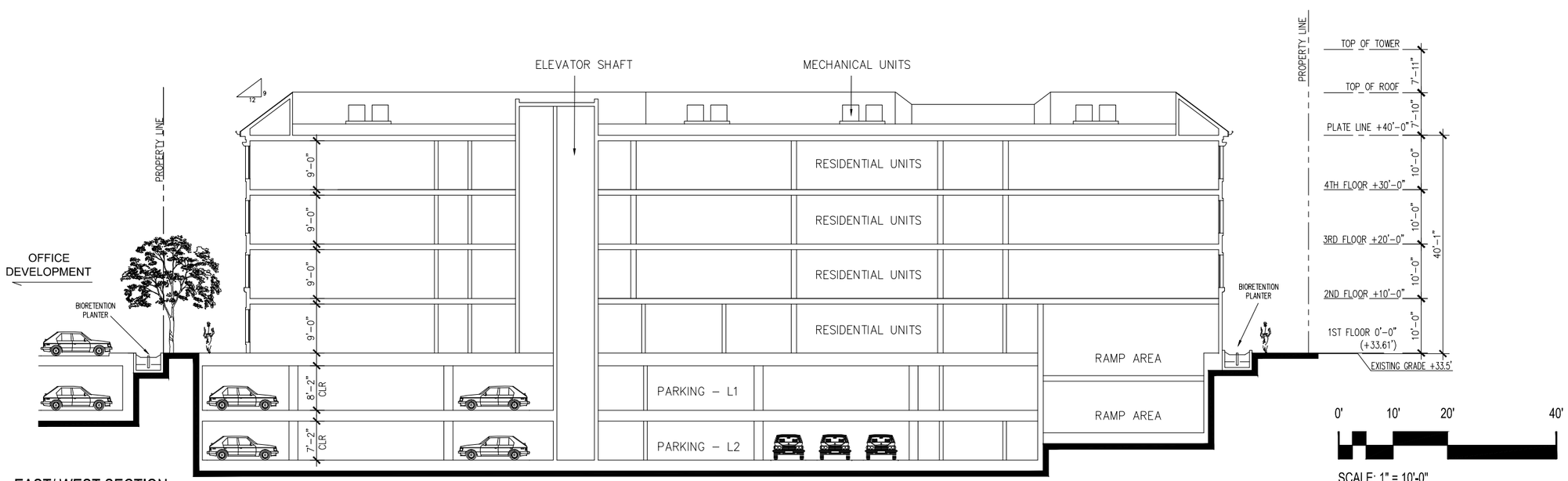


2 EAST/ WEST SECTION
1:20

DES ARCHITECTS ENGINEERS
399 Bradford Street
Redwood City, Ca. 94063
Tel: (650) 364-6453
Fax: (650) 364-3618
www.des-ae.com

TRANS WORLD ASSURANCE
885 South El Camino Real
San Mateo, CA 94402

# CENTRAL PARK SOUTH

885 South El Camino Real
San Mateo, CA 94402

| ISSUE: | DATE: | DESCRIPTION: |
|---|---|---|
| | 11/10/2014 | Revised planning application |
| | 01/29/2015 | Revised planning application |

DRAWN BY:
REVIEWED BY:
APPROVED BY:
DES PROJECT NO.:

## RESIDENTIAL BUILDING SECTIONS

© 2014

37
SHEET NO.

Mar 05, 2015 - 11:07am GKeshigor P:\Transworld\9th-ElCamino\9947001\Dwg\Arch\37-Residential Sections.dwg

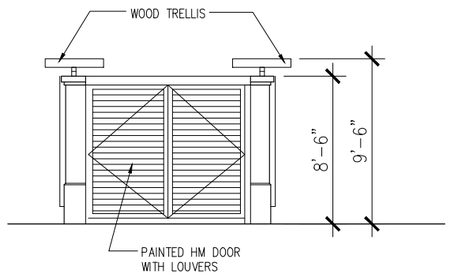


1 FRONT ELEVATION
1/4"=1'-0"

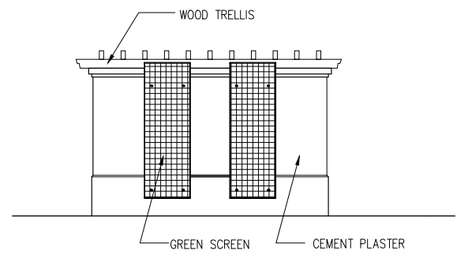


2 SIDE ELEVATION (REAR SIMILAR)
1/4"=1'-0"

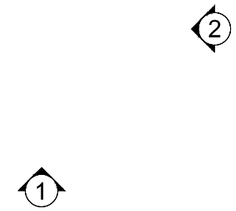


3 TRANSFORMER ENCLOSURE PLAN
1/4"=1'-0"

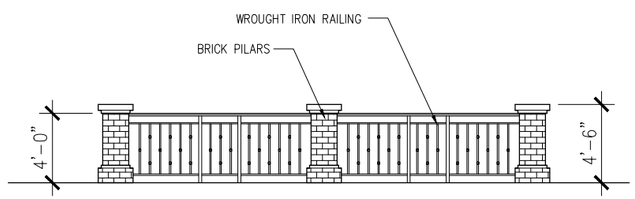


4 FENCE ALONG 9TH AVENUE (BACK OF SIDEWALK)
1/4"=1'-0"

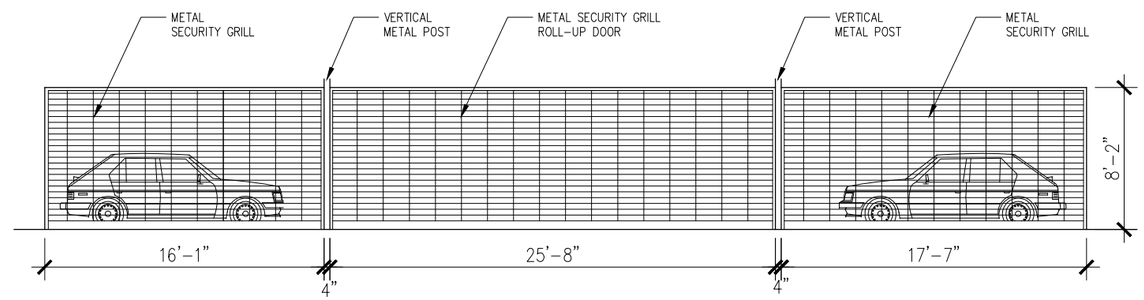


6 SECURITY GRILL ELEVATION
1/4"=1'-0"

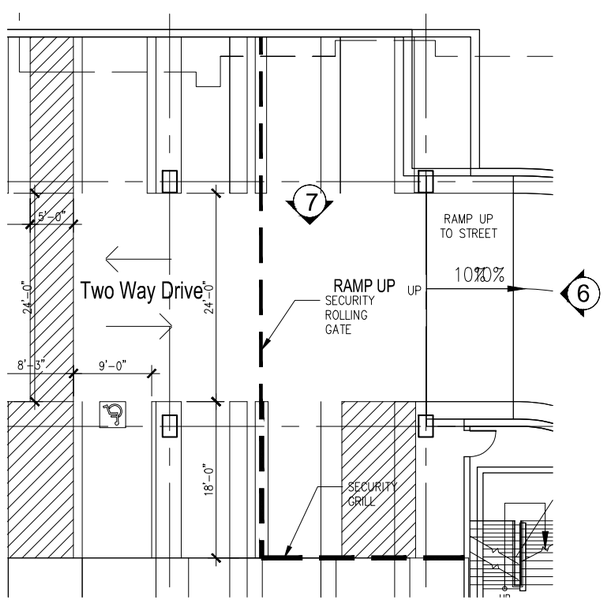


5 SECURITY GRILL PLAN ON BASEMENT LEVEL 1
1/8"=1'-0"

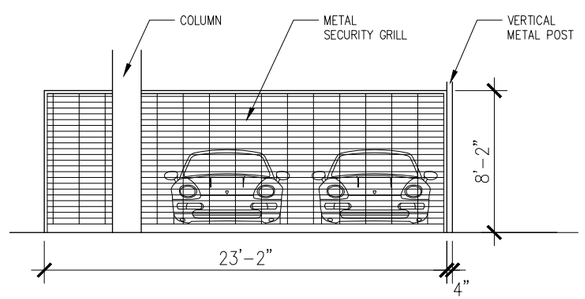


7 SECURITY GRILL ELEVATION
1/4"=1'-0"

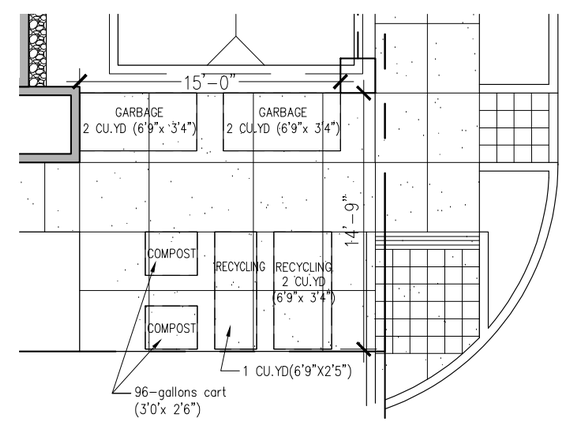


8 GARBAGE, RECYCLING & COMPOST STAGING AREA
1/4"=1'-0"

DES
ARCHITECTS
ENGINEERS

399 Bradford Street
Redwood City, Ca. 94063
Tel: (650) 364-6453
Fax: (650) 364-2618
www.des-ae.com

twa
TRANS WORLD
ASSURANCE

885 South El Camino Real
San Mateo, CA 94402

# CENTRAL PARK SOUTH

885 South El Camino Real
San Mateo, CA 94402

| ISSUE: | DATE: | DESCRIPTION: |
|---|---|---|
| | 11/10/2014 | Revised planning application |
| | 01/29/2015 | Revised planning application |
| | 03/16/2015 | Revised planning application |

DRAWN BY:

REVIEWED BY:

APPROVED BY:

DES PROJECT NO.:

## FENCE, TRANSFORMER ENCLOSURE, BASEMENT SECURITY GRILLS, GARBAGE STAGING

© 2014

38

SHEET NO.

Mar 15, 2015 - 2:05pm djeckins P:\TransWorld\9th-ElCamino\9947001\Dwg\Arch\38-Transformer Screening.dwg

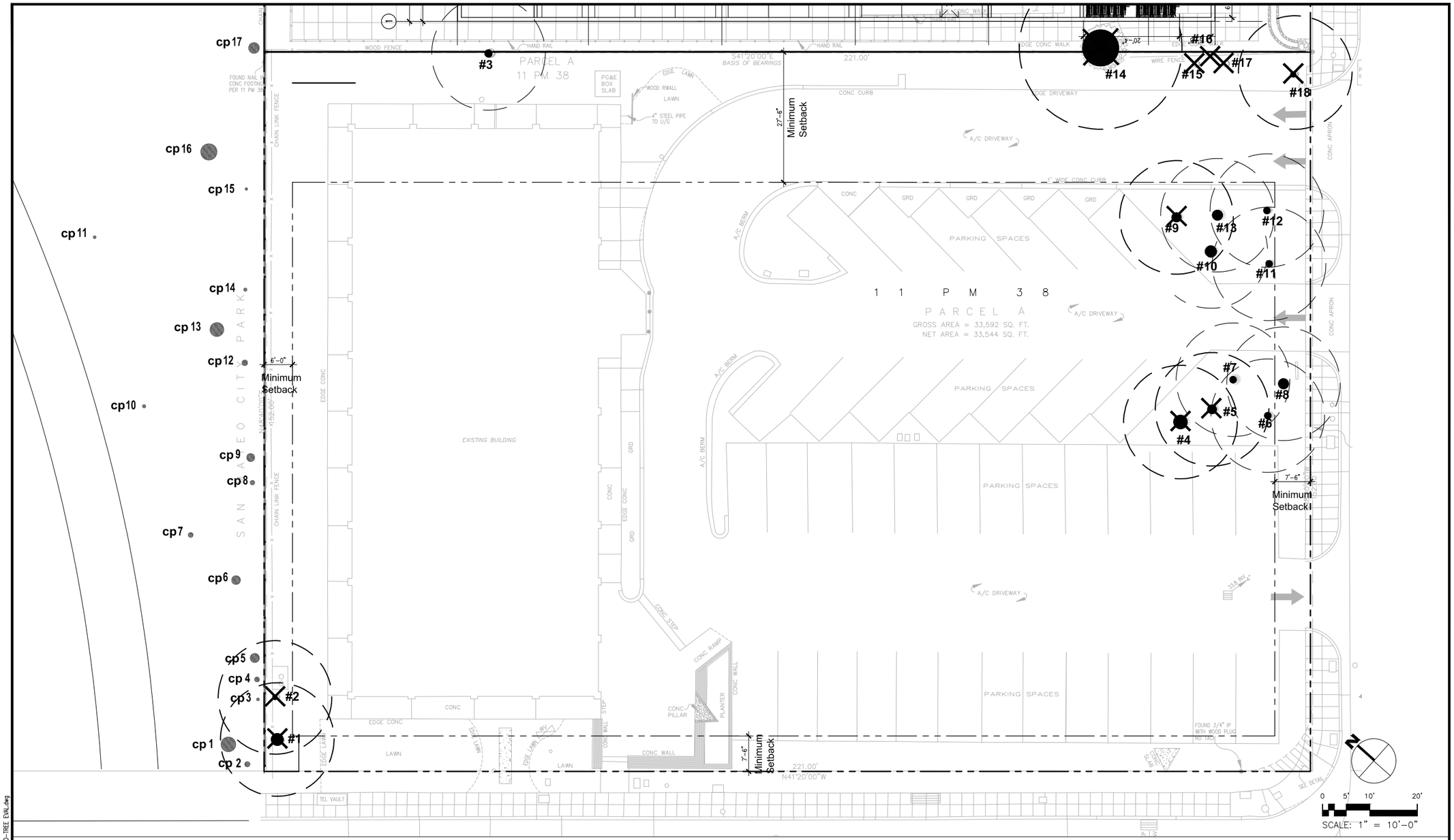


## TREE EVALUATION NOTES:

1. LEGEND:

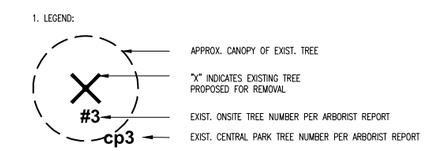


2. REFER TO SHEET T1 AND T2 FOR TREE INSPECTION TABLE AND TREE PROTECTION PLAN
3. REPLACEMENT OF HERITAGE TREES IS 1:1, 24" BOX MINIMUM
4. ALL EXISTING SHRUBS AND GROUNDCOVERS TO BE REMOVED
5. REFER TO ARBORIST REPORT FOR PACIFIC WESTERN BANK, AS PREPARED BY ARBORWELL MARCH 8, 2013, REVISED JANUARY 23, 2015
6. REFER TO SCHEMATIC LANDSCAPE PLAN FOR TREE REPLACEMENTS
7. ONSITE HERITAGE TREE REMOVAL PERMITTING, TOTAL OF 8 ONSITE TREES #1, #4, #5, #9, #14, #15, #16 AND #17.

1


DES ARCHITECTS ENGINEERS

399 Bradford Street
Redwood City, Ca. 94063
Tel: (650) 364-6453
Fax: (650) 364-2618
www.des-ae.com


TRANS WORLD ASSURANCE

885 South El Camino Real
San Mateo, CA 94402

# CENTRAL PARK SOUTH

885 South El Camino Real
San Mateo, CA 94402

| ISSUE: | DATE: | DESCRIPTION: |
|---|---|---|
| | 11/10/2014 | Revised planning application |
| | 01/29/2015 | Revised planning application |
| 1 | 03/16/2015 | Revised planning application |

DRAWN BY:

REVIEWED BY:

APPROVED BY:

DES PROJECT NO.:

OFFICE DEVELOPMENT

TREE EVALUATION PLAN

© 2014

11

SHEET NO.

Mar 15, 2015 - 12:21pm dpedkins P:\TransWorld\9th-ElCamino\9947001\Dwg\Land\11 0-TREE EVAL.dwg

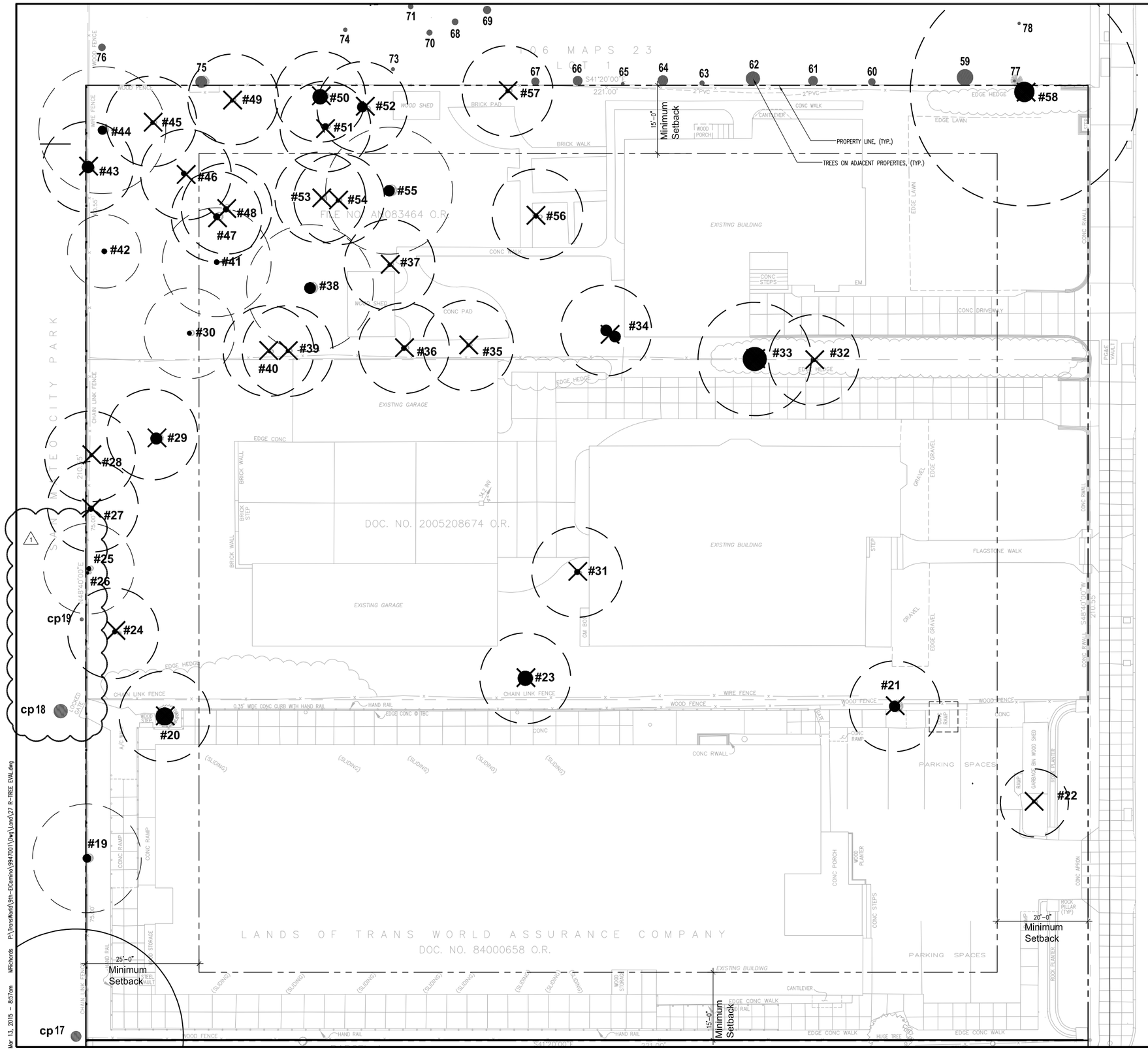


## TREE EVALUATION NOTES:

1. LEGEND:

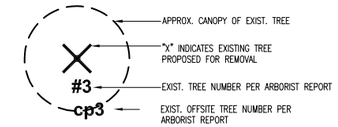


2. REFER TO SHEETS T1 AND T2 FOR TREE EVALUATION TABLE AND TREE PROTECTION PLAN
3. REPLACEMENT OF HERITAGE TREES IS 1:1, 24" BOX MINIMUM
4. ALL EXISTING SHRUBS AND GROUNDCOVERS TO BE REMOVED
5. REFER TO ARBORIST REPORT FOR PACIFIC WESTERN BANK, AS PREPARED BY ARBORWELL MARCH 8, 2013, REVISED JANUARY 23, 2015
6. REFER TO SCHEMATIC LANDSCAPE PLAN FOR TREE REPLACEMENTS
7. HERITAGE TREE REMOVAL PERMITTING, TOTAL OF 14. TREE #20, #21, #23, #29, #33, #34, #43, #46, #47, #50, #51, #52, #56 AND #58

0 5' 10' 20'
SCALE: 1" = 10'-0"

DES ARCHITECTS ENGINEERS
399 Bradford Street
Redwood City, Ca. 94063
Tel: (650) 364-6453
Fax: (650) 364-2618
www.des-ae.com

twa
TRANS WORLD ASSURANCE
885 South El Camino Real
San Mateo, CA 94402

# CENTRAL PARK SOUTH

885 South El Camino Real
San Mateo, CA 94402

| ISSUE: | DATE: | DESCRIPTION: |
|---|---|---|
| | 11/10/2014 | Revised planning application |
| | 01/29/2015 | Revised planning application |
| 1 | 03/16/2015 | Revised planning application |

DRAWN BY:
REVIEWED BY:
APPROVED BY:
DES PROJECT NO.:

RESIDENTIAL DEVELOPMENT

TREE EVALUATION PLAN

© 2014

27
SHEET NO.

Mar 13, 2015 - 8:57am MRichards P:\TransWorld\9th-ElCamino\9947001\Dwg\Land\27 R-TREE EVAL.dwg

| LOCATION | PAVER THICKNESS | BASE DEPTH |
|---|---|---|
| PEDESTRIAN | 60 MM | SEE SPEC. |
| VEHICULAR | 80 MM | SEE SPEC. |

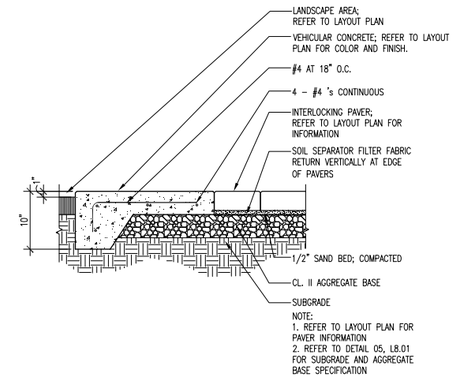


NOTE:
1. REFER TO LAYOUT PLAN FOR PAVER INFORMATION
2. REFER TO DETAIL 05, L8.01 FOR SUBGRADE AND AGGREGATE BASE SPECIFICATION

## 25 PAVERS ON SAND

1"=1'-0" (12)

FILE NAME: PV-INT-PVR DRAWN BY: LNDSCPE

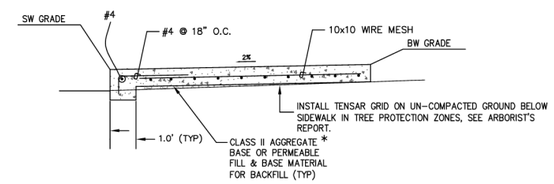


* SEE CROSS SECTIONS FOR SIDEWALK STRUCTURAL SECTIONS IN TREE PROTECTION ZONES.

NOTE:
TYPICAL NON-RAISED SW SECTION (SW-TC = 0") OUTSIDE OF TREE PROTECTION ZONES: 4"PCC/4"CLII AB PER DET. 3/C3.0

## 26 SIDEWALK WITH LIMITED EXCAVATION

NTS


DES ARCHITECTS ENGINEERS

399 Bradford Street
Redwood City, Ca. 94063
Tel: (650) 364-6453
Fax: (650) 364-2618
www.des-ae.com


TRANS WORLD ASSURANCE
885 South El Camino Real
San Mateo, CA 94402

# CENTRAL PARK SOUTH

885 South El Camino Real
San Mateo, CA 94402

| ISSUE: | DATE: | DESCRIPTION: |
|---|---|---|
| | 11/10/2014 | Revised planning application |
| | 01/29/2015 | Revised planning application |
| 1 | 03/16/2015 | Revised planning application |

DRAWN BY:

REVIEWED BY:

APPROVED BY:

DES PROJECT NO.:

## LANDSCAPE DETAILS

© 2014

28A

Mar 13, 2015 - 9:00am MRichards P:\TransWorld\39th-ElCamino\3947001\Dwg\Land\L-DETL.dwg