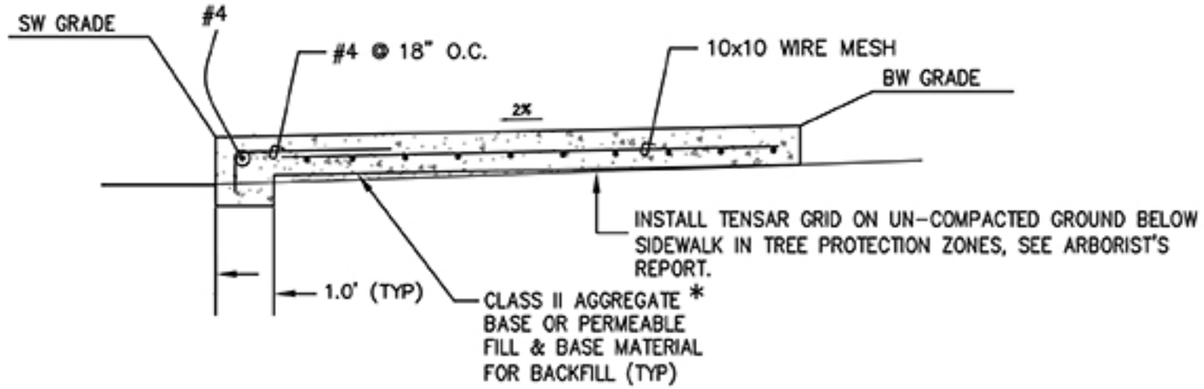

* SEE CROSS SECTIONS FOR SIDEWALK STRUCTURAL SECTIONS IN TREE PROTECTION ZONES.

NOTE:
TYPICAL NON-RAISED SW SECTION (SW-TC = 0") OUTSIDE OF TREE PROTECTION ZONES: 4"PCC/4"CLII AB PER DET. 3/C3.0

1 MODIFIED PAVEMENT SECTION

Detail at Pedestrian Path Adjacent to Neighboring Redwoods

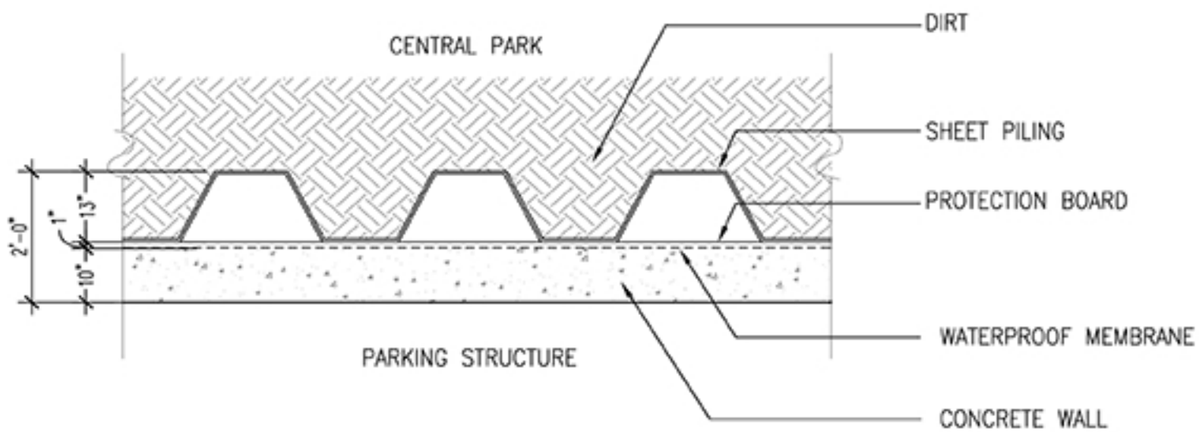

2 SHEET PILING DETAIL

Detail for Shoring at Property Line Between Office Development & Central Park

LOCATION	PAVER THICKNESS	BASE DEPTH
PEDESTRIAN	60 MM	SEE SPEC.
VEHICULAR	80 MM	SEE SPEC.

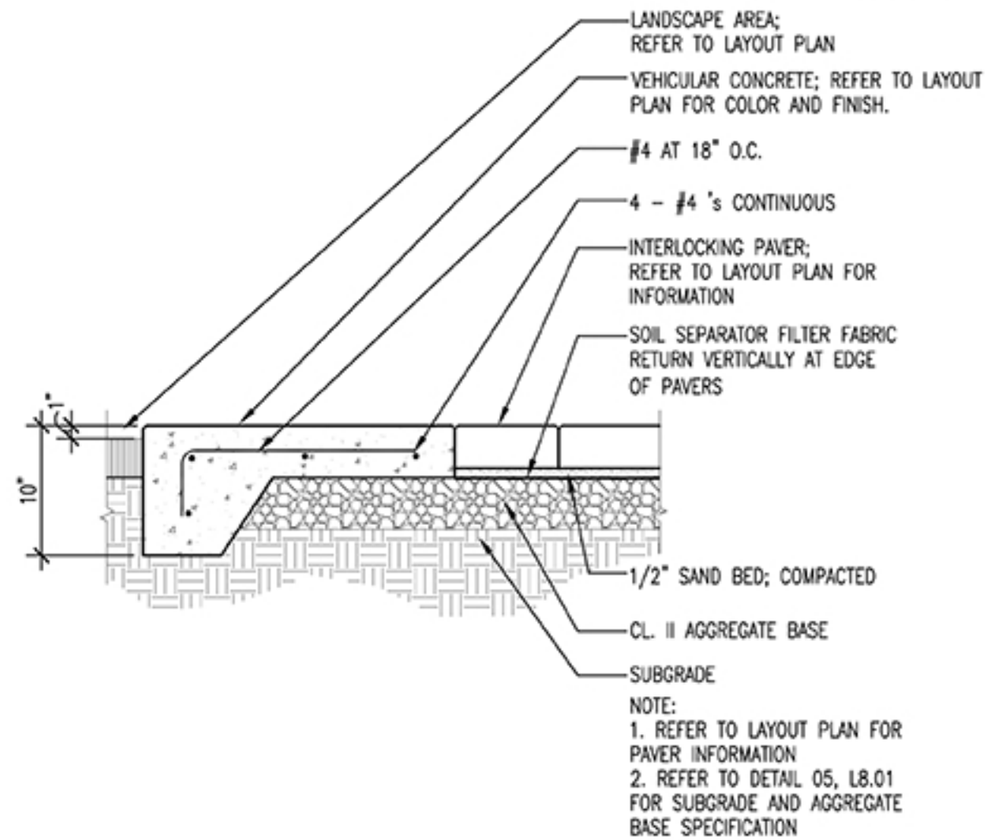

NOTE:
1. REFER TO LAYOUT PLAN FOR PAVER INFORMATION
2. REFER TO DETAIL 05, L8.01 FOR SUBGRADE AND AGGREGATE BASE SPECIFICATION

3 PAVERS ON SAND

Detail at Visitor Parking Adjacent to Neighboring Redwoods