1 DOORS

A. LATCHES AND LOCKSETS: PROVIDE LEVER TYPE, PUSH-PULL OR PANIC TYPE HARDWARE 30 INCHES TO 44 INCHES ABOVE FLOOR.

B. MAXIMUM FORCE TO OPERATE DOORS SHALL BE 5 LBS. PRESSURE. FIRE DOORS SHALL BE MAX 15 LBS.

C. FLOOR LEVEL AT DOORS:

1. THRESHOLDS: THE FLOOR OR LANDING SHALL NOT BE MORE THAN 1/2" LOWER THAN THE THRESHOLD OF THE DOOR WAY. CHANGE IN LEVEL BETWEEN 1/4" AND 1/2" SHALL BE BEVELED WITH A SLOPE NO GREATER THAN 1:2. (SEE FIGURE 1A BELOW).

2. LEVEL FLOOR OR LANDING: THERE SHALL BE A LEVEL AND CLEAR AREA ON EACH SIDE OF AN EXIT DOOR. THE LEVEL AREA SHALL BE AS SHOWN IN FIGURE 2B. THE SPACE BETWEEN TWO CONSECUTIVE DOOR OPENING (VESTIBULE) SHALL PROVIDE 48 INCHES OF CLEAR SPACE FROM ANY DOOR OPENING INTO SUCH SPACE. (SEE FIGURE 1B BELOW).

D. DOOR WIDTH & HEIGHT: 36" AND 6'-8" HIGH MIN. WITH A CLEAR WIDTH OF 32" MIN. WITH DOOR OPEN 90° MEASURED FROM THE FACE OF THE DOOR TO THE OPPOSITE STOP/LATCH SIDE.

E. THE BOTTOM 10" OF ALL DOORS, EXCEPT AUTOMATIC AND SLIDING DOORS, SHALL HAVE A SMOOTH UNINTERRUPTED SURFACE TO ALL THE DOOR TO BE OPENED BY A WHEELCHAIR FOOT-REST WITHOUT CREATING A TRAP OR HAZARDOUS CONDITION.

F. EACH GRADE LEVEL EXTERIOR EXIT DOOR SHALL BE IDENTIFIED BY A TACTILE EXIT WITH THE WORD "EXIT". EACH EXIT DOOR THAT LEADS DIRECTLY TO A GRADE-LEVEL EXTERIOR EXIT BY MEANS OF A STAIRWAY OR RAMP SHALL BE IDENTIFIED BY A TACTILE EXIT SIGN WITH THE FOLLOWING WORDS AS APPROPRIATE:

1. "EXIT STAIRS DOWN"
2. "EXIT RAMP DOWN"
3. "EXIT STAIR UP"
4. "EXIT RAMP UP"
5. EACH EXIT DOOR THAT LEADS DIRECTLY TO A GRADE-LEVEL EXTERIOR EXIT BY MEANS OF AN EXIT ENCLOSURE OR AN EXIT PASSAGEWAY SHALL BE IDENTIFIED BY A TACTILE EXIT SIGN WITH THE WORDS "EXIT ROUTE."
6. EACH EXIT ACCESS DOOR FROM AN INTERIOR ROOM OR AREA TO A CORRIDOR OR HALLWAY THAT IS REQUIRED TO HAVE A VISUAL EXIT SIGN, SHALL BY IDENTIFIED BY A TACTILE EXIT SIGN WITH THE WORDS "EXIT ROUTE."
7. EACH EXIT DOOR THROUGH A HORIZONTAL EXIT SHALL BE IDENTIFIED BY A SIGN WITH THE WORDS "TO EXIT."

(SEE FIGURE 1C BELOW)

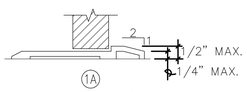

1A THRESHOLDS

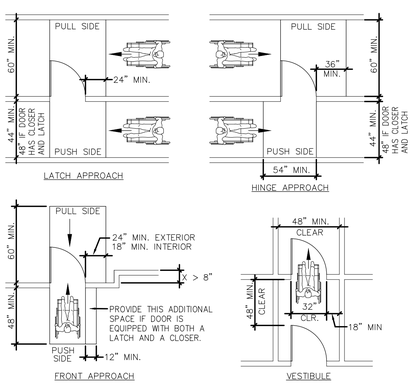

1B LEVEL LANDINGS & DOOR CLEANCES

1C TACTILE EXIT SIGN

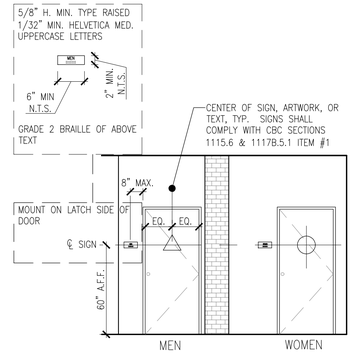

7 Existing Accessible Toilet Rooms - Entry Elevations 1/4" = 1'-0"

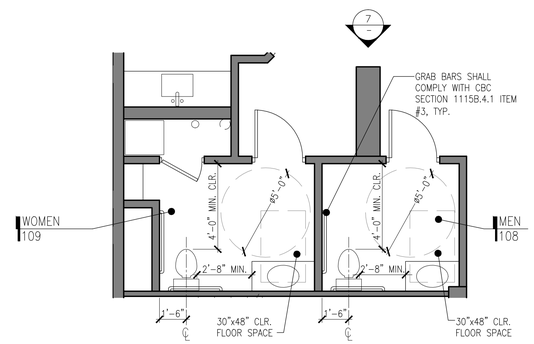

6 Existing Accessible Toilet Rooms - Enlarged Plans 1/4" = 1'-0"

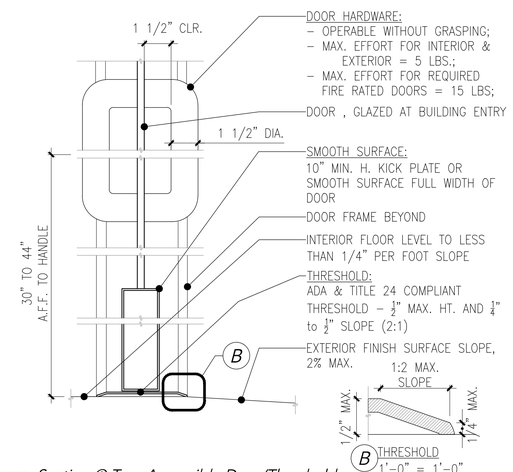

5 Section @ Typ. Accessible Door/Threshold 3"=1'-0"

TRAVEL PATH LEGEND

ACCESSBLE PATH TRAVEL

N.I.C.

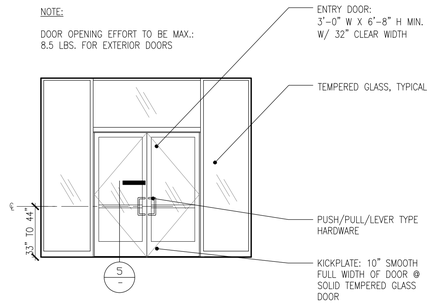

4 Main Ground Floor Entry - Elevation 1/4" = 1'-0"

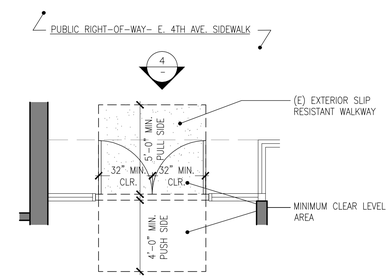

3 Main Ground Floor Entry - Enlarged Plan 1/4" = 1'-0"

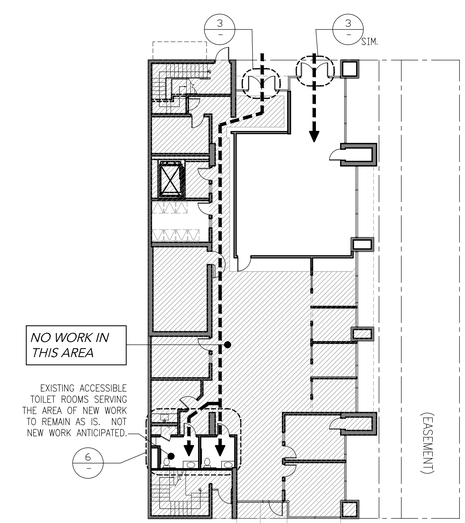

1 Ground Floor Path of Travel Plan 1/16" = 1'-0"

Draper University

date	issue	by/check
08.17.12	planning set revision	sk/tjm
09.19.12	planning comments #2	sk/tjm
09.24.12	PC public hearing set	nm/sk/tjm

TMDA

520 Washington Street
San Francisco, CA 94111

t: 415.986.1600
f: 415.986.1665

project no. 11028.00

Draper University

37 East 4th Avenue
San Mateo, CA 94401

N

scale: AS NOTED

Dwg. Title:

ADA - Path of Travel

Dwg No. A0.2

Page No.