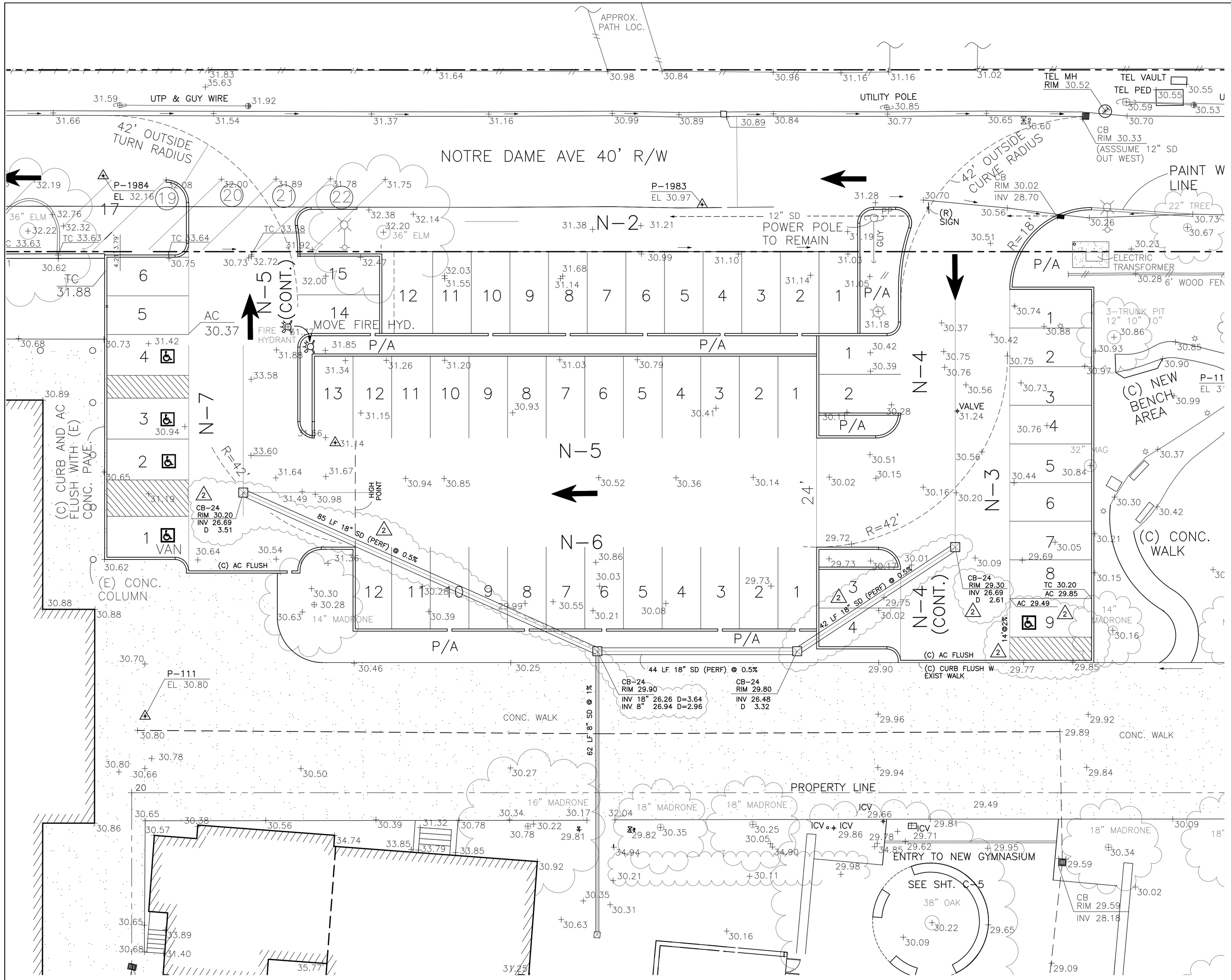

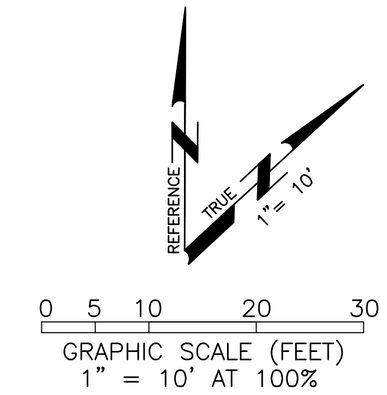

Case+Abst Architects LLP
1033 POLK STREET
SAN FRANCISCO, CA 94109
415.351.3600

CIVIL ENGINEER
KAVANAGH ENGINEERING
708 CAROLAN AVENUE
BURLINGAME, CA 94010
650.579.1944

JOB NO. 0542 SMAT

REGISTERED PROFESSIONAL ENGINEER CHARLES L. KAVANAGH No. 20858 Exp. 9-30-11 CIVIL STATE OF CALIFORNIA

New School Gymnasium For:

Saint Matthew

Catholic Church

One Notre Dame Avenue, San Mateo, CA 94402

Date:	12-03-2010
Project Number:	611-101
Scale:	1" = 10'
Drawn By:	DIS, SUL

No.	Revision	Date
2	Planning Submittal	09.30.11
1	Planning Submittal	02.02.11

Sheet Title

PARKING PLAN NORTH

Sheet Number

C-8

These drawings constitute the original and unpublished work of Case+Abst Architects LLP and may not be duplicated, used, or disclosed without written consent of the Architect.